Le259

Highlights:

- 2 Megapixel Ethernet Camera
- HD Sensor Format
- Excellent Sensitivity
- High Dynamic Range
- Global Electronic Shutter

Outline

The Le259's combination of high definition resolution, excellent sensitivity, and high dynamic range makes it an ideal solution for applications with large fields of view, poor lighting conditions, and high light-contrast scenes such as traffic and blob analysis.

Capturing full 1920x1080 resolution at 15 fps, these cameras deliver outstanding picture quality and performance. Configurable compression for JPEG still-images or MJPEG live capturing video is provided across a standard 10/100BaseT network interface.

Lumenera has simplified IP camera installation with a straightforward plug-and-play process. Intuitive user interface viewed with most browsers provides standard camera control. The I/O connector provides an interface to an external alarm sensor or control of peripheral equipment such as; IR lighting, strobe and PTZ. Alarm notification provides the date, time and camera IP address.

The user defined motion detection parameters across multiple zones provide more accurate triggering of alarms, while programmable privacy zones ensure compatibility with all regulations.

On-board memory buffers supply still images that precede and follow alarm events. Transfer of images via email, FTP, RTP or HTTP.

Lumenera's Le259 is provided with a larger SLR Canon Bayonet-Mount – to provide remote control of focus and iris through standard SLR lenses. Camera can be mounted stand-alone or by means of standard environmental enclosures.

Contact Lumenera with your camera requirements today.

Product Features

- **<u>Outstanding HD</u> image detail**
- **15 fps at full 1920 x 1080 resolution**
  30 fps at 1920 x 480 resolution
- **1000+ lines of resolution, color or monochrome, progressive scan, 2.0 megapixel, HD CCD sensor**
- **Electronic global shutter**
- **Auto focus, auto iris**
- **Easy installation and set-up**
- **Feature rich camera functions:**
  - **Auto white balance & auto exposure**
  - **Day/Night software Setting**
  - **Configurable compression ratio**
  - **Multiple motion detection zones**
- **I/O control of alarms, strobe, PTZ, lighting or other peripherals**
- **Image transfer via HTTP, FTP, RTP, or Email**
- **Camera control via HTTP, XML-RPC, Telnet or Microsoft COM**
- **Security / password protection**
- **FCC Class B, CE Certified**
- **SLR Canon Bayonet EF-mount standard (call for CS and C-mount options)**
- **Compatible with most Operating Systems (Windows 2K, Windows NT and Windows XP, as well as Linux and Mac)**
- **Full 1 year warranty**

Lumenera Corporation • 7 Capella Court, Ottawa, ON Canada K2E 8A7 • (t) 1.613.736.4077 • (f) 1.613.736.4071 • www.lumenera.com

©2008-2009 Lumenera Corporation, all rights reserved.
Design, features, and specifications are subject to change without notice
02232009

Specifications Le259

Image Sensor	**16:9 Aspect Ratio, HD format, color or mono**
Effective Pixels	**1920 x 1080, 7.4µm square pixels**
Frame Rate	**15 fps at 1920 x 1080, 30 fps at 1920 x 480**
Dynamic Range	**60dB**
Sensitivity	**<0.5 lux at F1.0**
Auto Focus	**Automatic / Manual (when used with SLR lens)**
Auto Iris	**Automatic / Manual (when used with SLR lens)**
Auto Exposure	**Automatic / Manual**
White Balance	**Automatic / Manual**
Dimensions	**3.25”(W) x 2.98”(H) x 7.709”(D) not including lens**
Mass	**~600g**
Power	**12VDC, ~10 Watts**
Operating Temperature	**-10° C to +50° C (environmental enclosure will provided extended temperatures with fan / heater)**
Operating Humidity	**5%-95%, Non-condensing**
Interface	**RJ45 twisted pair cable, 10/100baseT Ethernet**
Lens Mount	**SLR Canon Bayonet-Mount - lens not included**
Image Buffer	**48 MB standard, 128MB optional**

Recommended PC Specifications

O/S: Windows 2000 (SP 3), or XP (SP 2)
CPU: 2.8GHz or above Pentium computer (required for full frame rate preview)

600Mhz or above Pentium compatible computer (for basic functionality)

Network: 100 Mbps Ethernet LAN
Browser: Internet Explorer v6.0

Recommended Applications

The Le259 is ideal for, but not limited to the following applications:

- Industrial process monitoring and malfunction detection
- Blob analysis
- Traffic applications including:
  - Red light enforcement
  - License plate reading (ALPR)
  - Driver and automobile recognition
  - Speed enforcement
  - Bridge and tunnel surveillance

Mono Response Curve

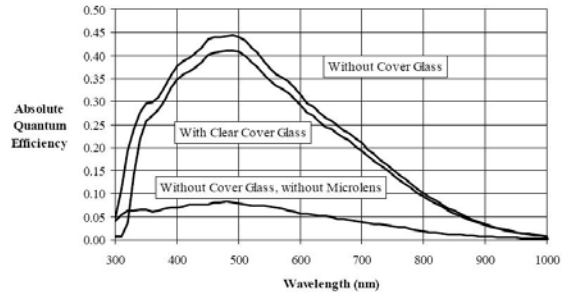

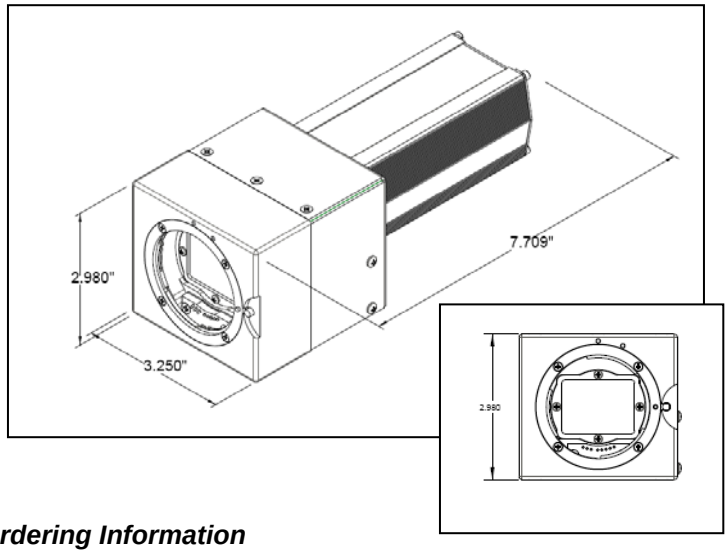

Color Response Curve

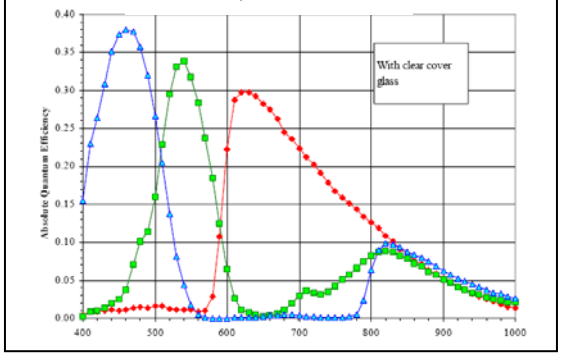

Ordering Information

Le259C	– 2.0 Megapixel Canon-Mount Color Camera
Le259M	– 2.0 Megapixel Canon-Mount Monochrome Camera
Lu8501	– Power supply with international plugs, 12VDC/2A output
Le902	– Optional DC iris adapter cable

Lumenera Corporation • 7 Capella Court, Ottawa, ON Canada K2E 8A7 • (t) 1.613.736.4077 • (f) 1.613.736.4071 • www.lumenera.com

©2008-2009 Lumenera Corporation, all rights reserved.
Design, features, and specifications are subject to change without notice
02232009